END ITEM	NEXT ASSY

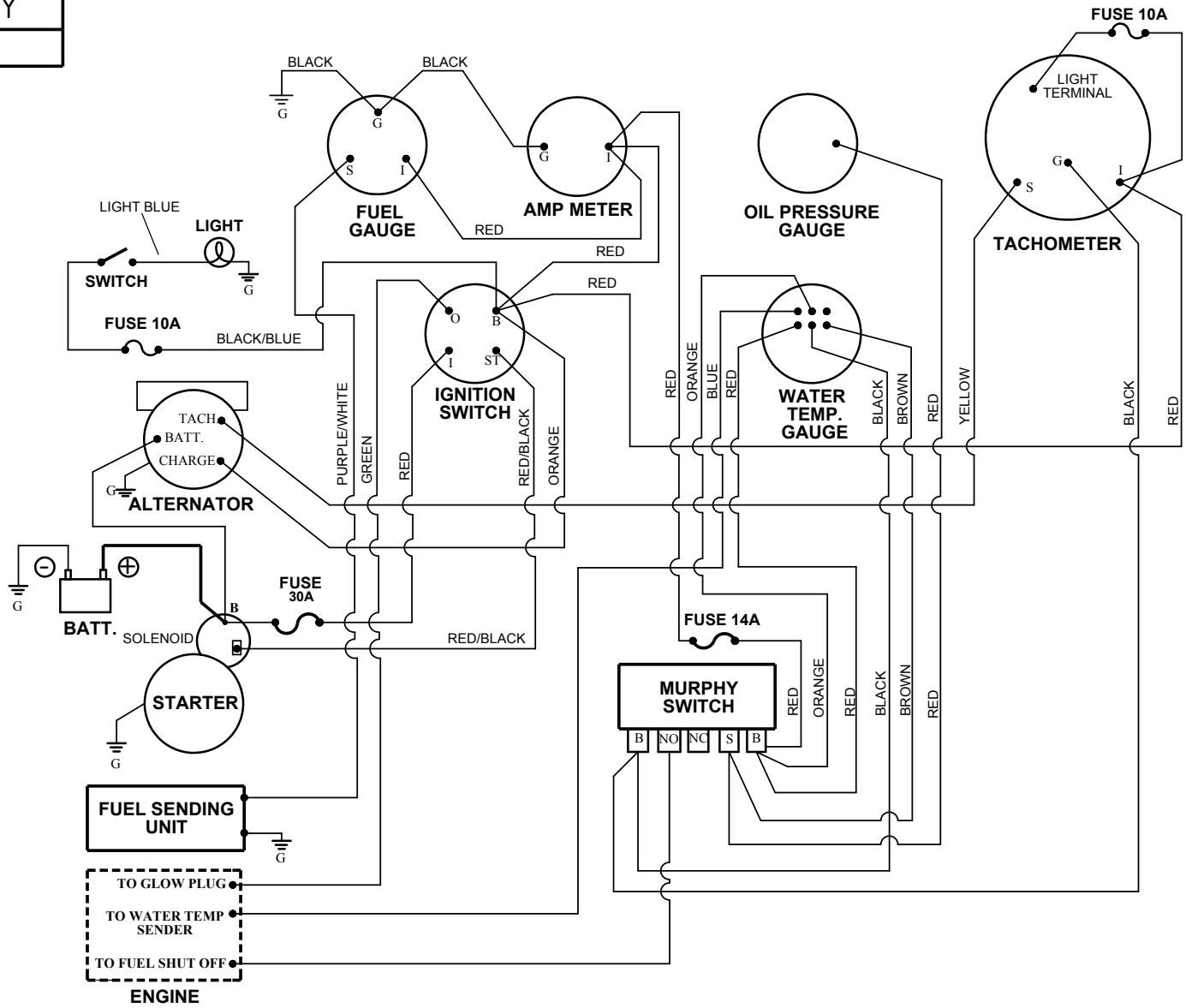

REV	ECN	CHECKED BY	CHANGE DESCRIPTION	CHANGE BY	DATE
PRE02					

3RD ANGLE PROJECTION

UNLESS OTHERWISE SPEC.

DIMNS. IN INCHES
ANSI Y14.5 - 1982
STD. TOLERANCES
X. X ± .060
X. XX ± .030
X. XXX ± .010
FRAC.DIM. ± 1/32
DEG. ± 1
BREAK ALL EDGES
.010 - .015

A

1 PAGE OF 1

DO NOT SCALE DRAWING

MATL # N/A

MATL SPECS N/A

DESCRIPTION SL2020 WIRING DIAGRAM

ITEM NUMBER 30028

DESIGN BY SF

DATE 11/23/05

NOTICE: THIS DOCUMENT AND ITS CONTENTS ARE THE PROPERTYOF FINCO INC. NO USE OR COPIES MAY BE MADE WITHOUT WRITTEN PERMISSION .

STRAIGHTLINE